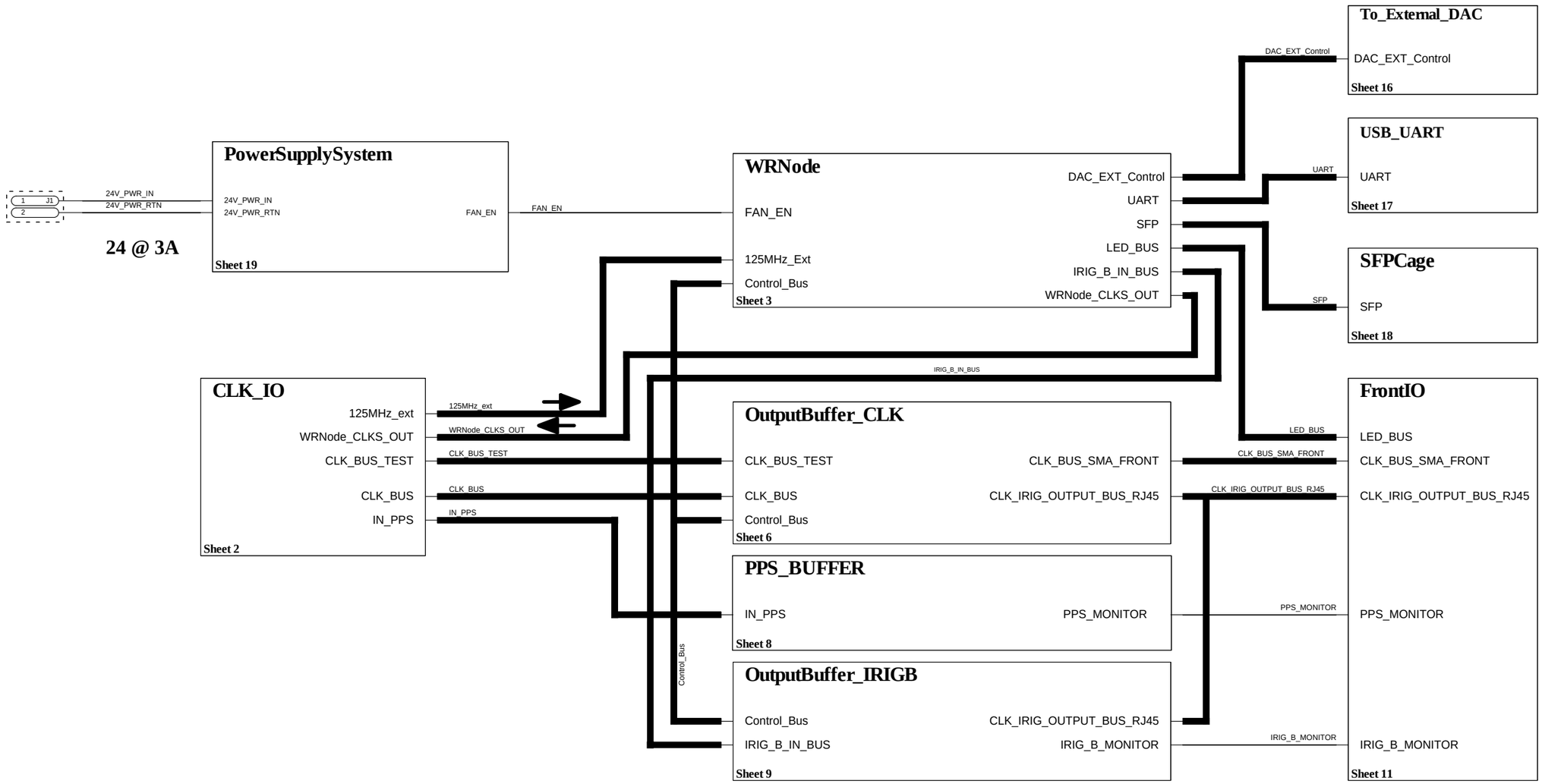

rev.	by	notes

Timing Main Board v2

Project : ET Pathfinder Demonstrator

Sheetname : Schematic1_1

Nikhef Amsterdam

Science Park 105, 1098XG, Amsterdam
+31-(0)20-5922000 www.nikhef.nl

11500.07.02.2

Designed by G C Visser

Drawn by G C Visser

Size 420 x 297mm

Sheet 1 of 23 A3

Date 2023-10-18

Either directly feed forward BabyWR outputs 10MHz, 100MHz and PPS
OR
Route them via cleancup reclocking Flip-Flops on an external High Precision Oscillator board (100 MHzInTheLoop).

White Rabbit reference clock for BabyWR when using an external High Precision Oscillator.

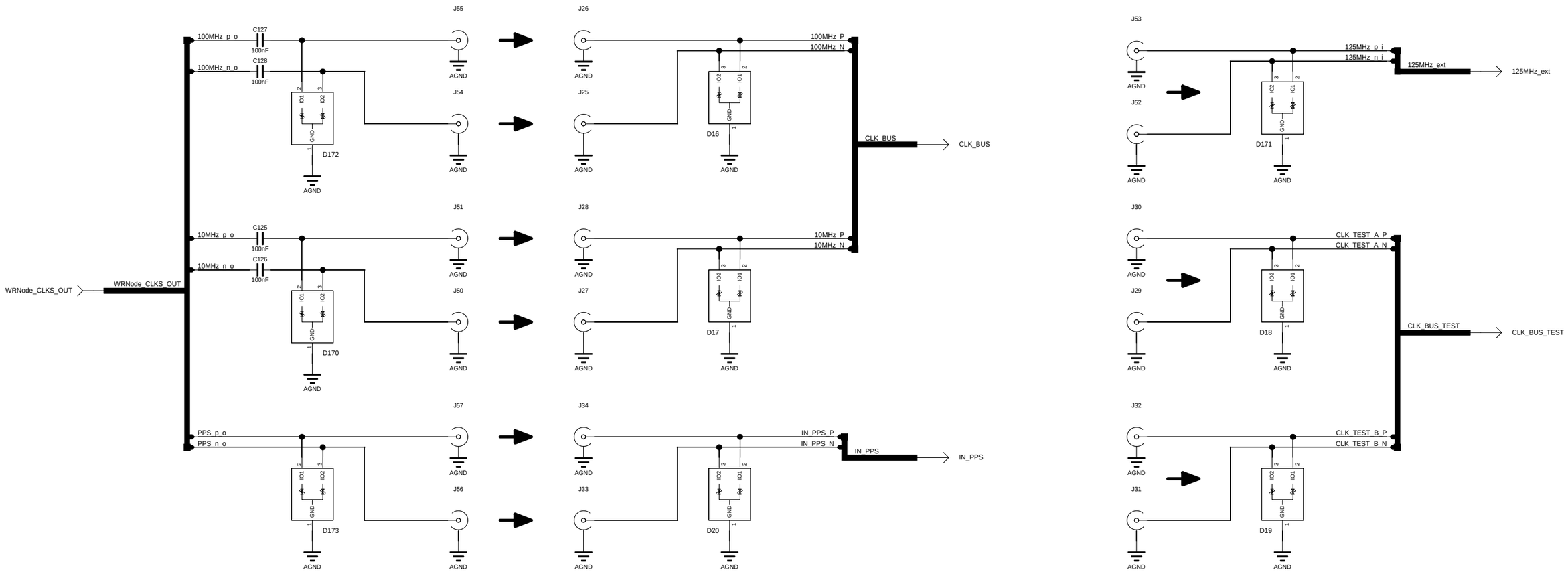

rev.	by	notes

Timing Main Board v2

Project : ET Pathfinder Demonstrator

Sheetname : CLK_IO

Nikhef Amsterdam

Science Park 105, 1098XG, Amsterdam
+31-(0)20-5922000 www.nikhef.nl

11500.07.02.2

Designed by G C Visser

Drawn by G C Visser

Size 420 x 297mm

Sheet 2 of 23 A3

Date 2023-10-18

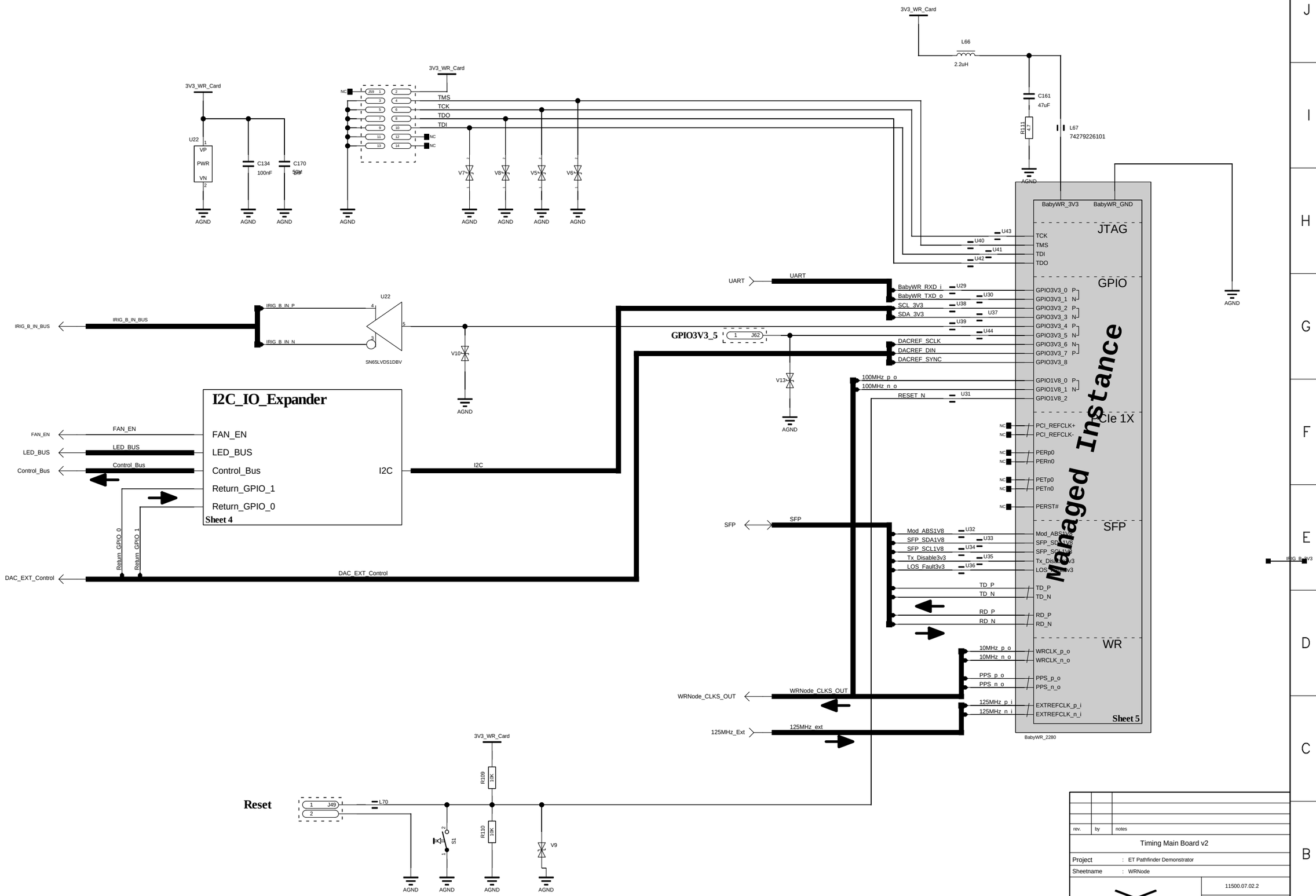

rev.	by	notes

Timing Main Board v2

Project : ET Pathfinder Demonstrator

Sheetname : WRNode

Nikhef Amsterdam

Science Park 105, 1098XG, Amsterdam
+31-(0)20-5922000 www.nikhef.nl

11500.07.02.2

Designed by G C Visser

Drawn by G C Visser

Size 420 x 297mm

Sheet 3 of 23 A3

Date 2023-10-18

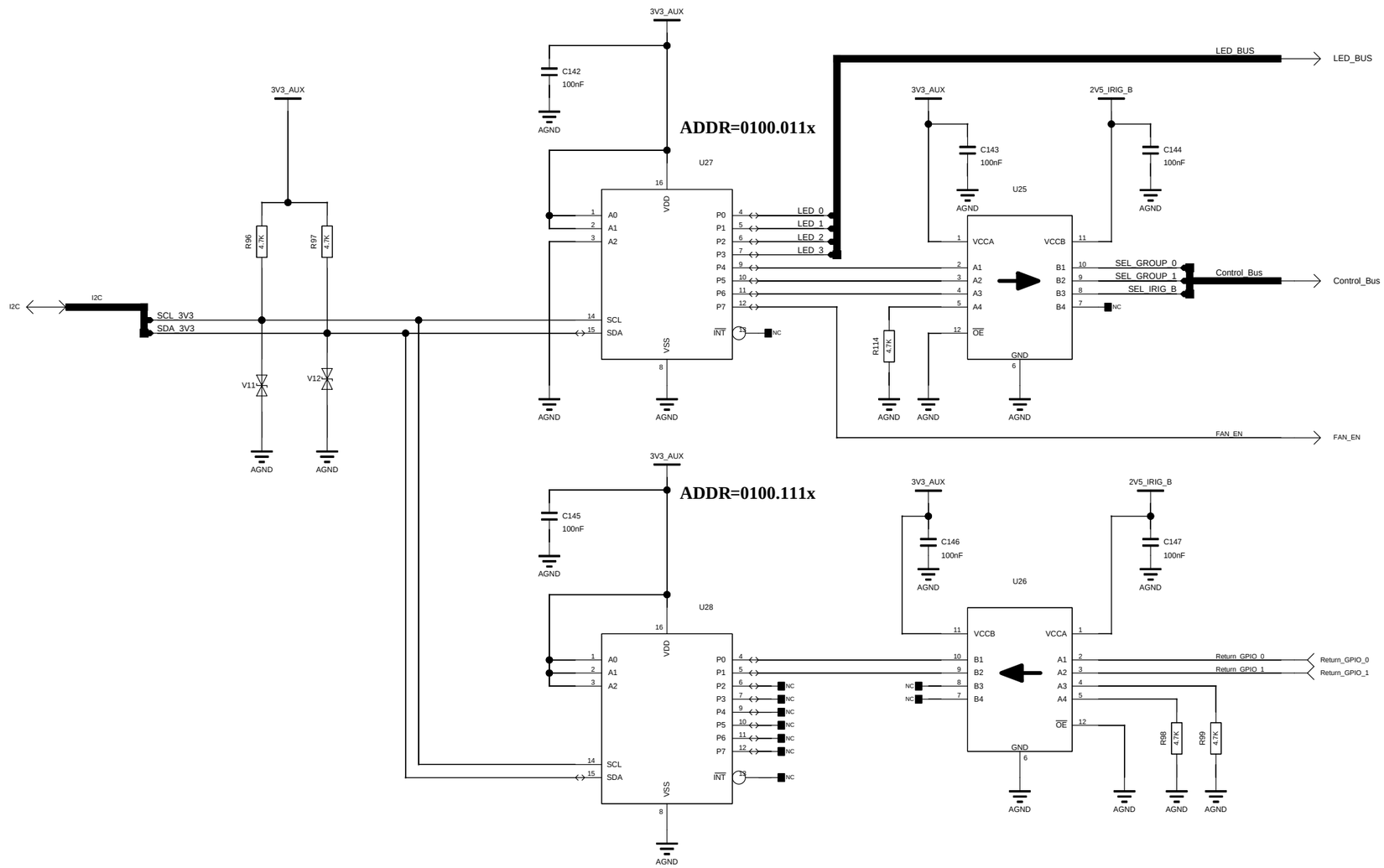

rev.	by	notes

Timing Main Board v2

Project : ET Pathfinder Demonstrator

Sheetname : I2C_IO_Expander

Nikhef Amsterdam

Science Park 105, 1098XG, Amsterdam
+31-(0)20-5922000 www.nikhef.nl

11500.07.02.2

Designed by G C Visser

Drawn by G C Visser

Size 420 x 297mm

Sheet 4 of 23 A3

Date 2023-10-18

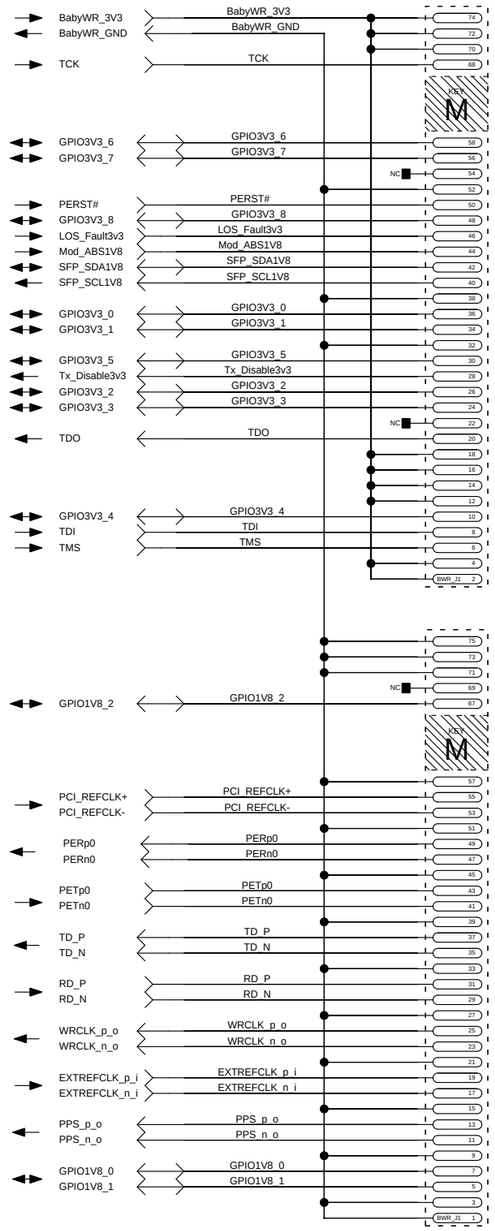

NC	BWR_MT1	78614025360	WA-SMSA SMT Steel Spacer withinternal thread, M3x2,5internal Thread
NC	MP2	SCREW	M3x2, thread=0.5, Wafer-Head Style
NC	MP3	11300.13.02	BabyWr Module, M2, type 2280-D6-M

rev.	by	notes

<BOARD NAME>

Project : <PROJECT NAME>

Sheetname : Fub552

Nikhef Amsterdam

Science Park 105, 1098XG, Amsterdam
+31-(0)20-5922000 www.nikhef.nl

<ET NR>

Designed by <NAME>

Drawn by <NAME>

Size 420 x 297mm

Sheet 5 of 1 A3

Date <YYYY-MM-DD>

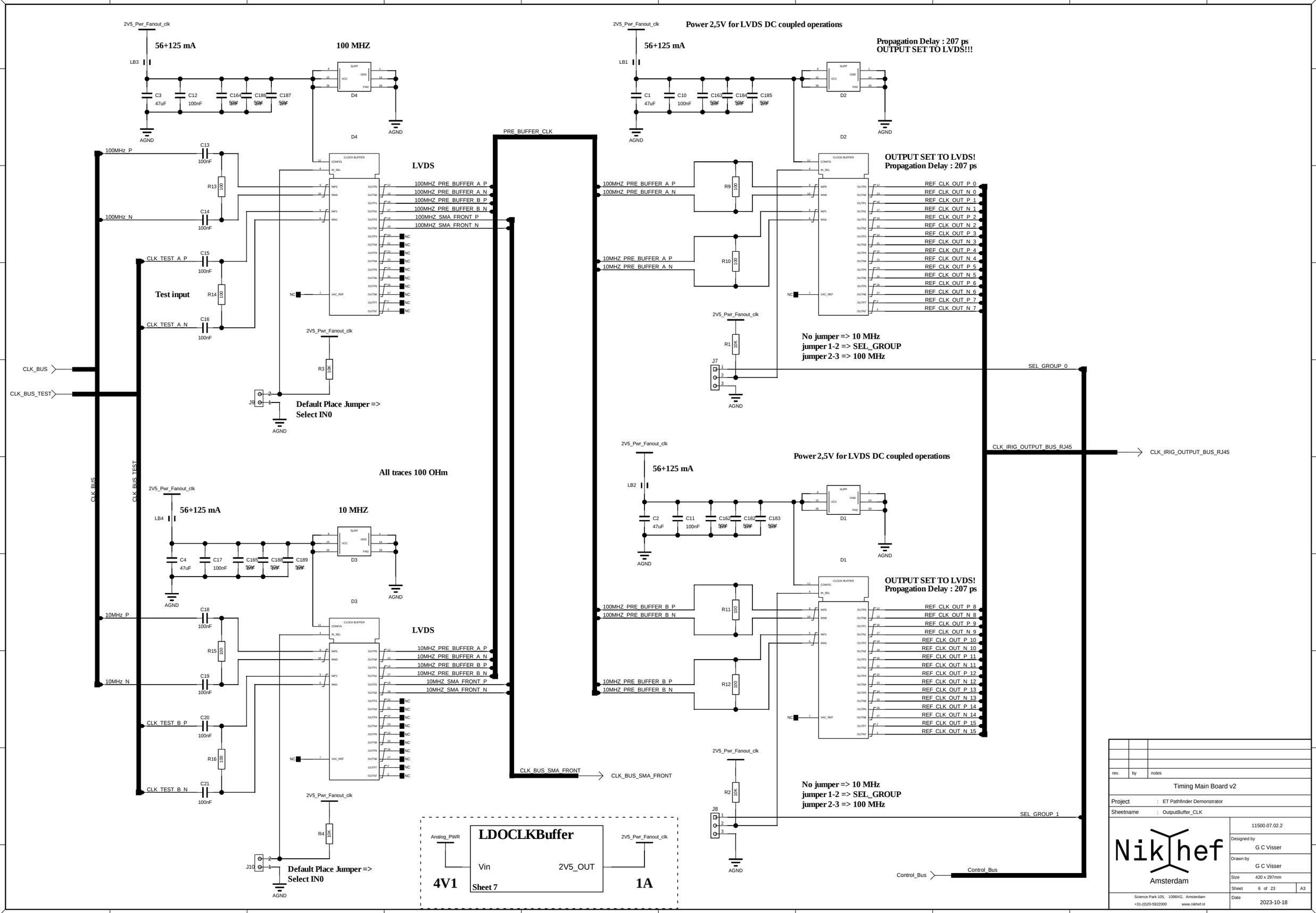

rev.	by	notes

Timing Main Board v2

Project : ET Pathfinder Demonstrator

Sheetname : OutputBuffer_CLK

Nikhef Amsterdam

Science Park 105, 1098XG, Amsterdam
+31-(0)20-5922000 www.nikhef.nl

11500.07.02.2

Designed by G C Visser

Drawn by G C Visser

Size 420 x 297mm

Sheet 6 of 23 A3

Date 2023-10-18

2V5 Powersupply Needs large Copper plane for cooling

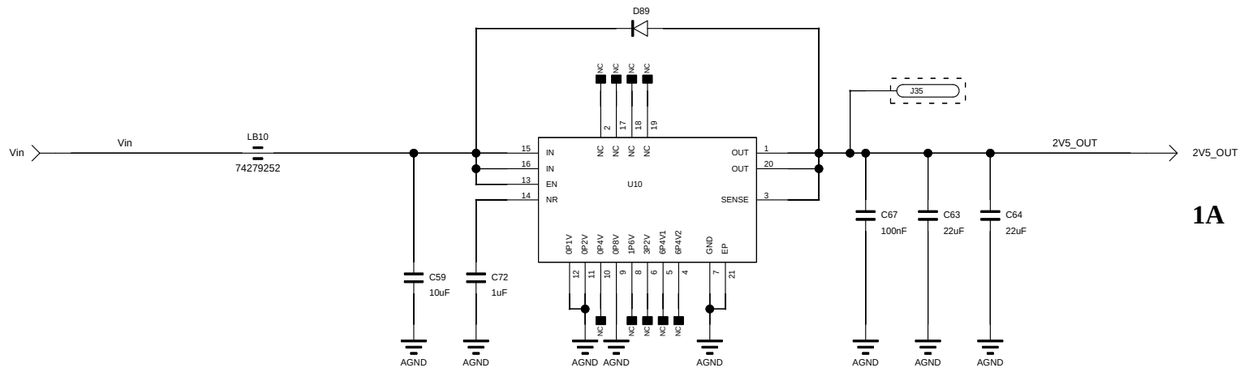

1A

rev.	by	notes

Timing Main Board v2

Project : ET Pathfinder Demonstrator

Sheetname : LDOCLKBuffer

Nikhef Amsterdam

Science Park 105, 1098XG, Amsterdam
+31-(0)20-5922000 www.nikhef.nl

11500.07.02.2

Designed by G C Visser

Drawn by G C Visser

Size 420 x 297mm

Sheet 7 of 23 A3

Date 2023-10-18

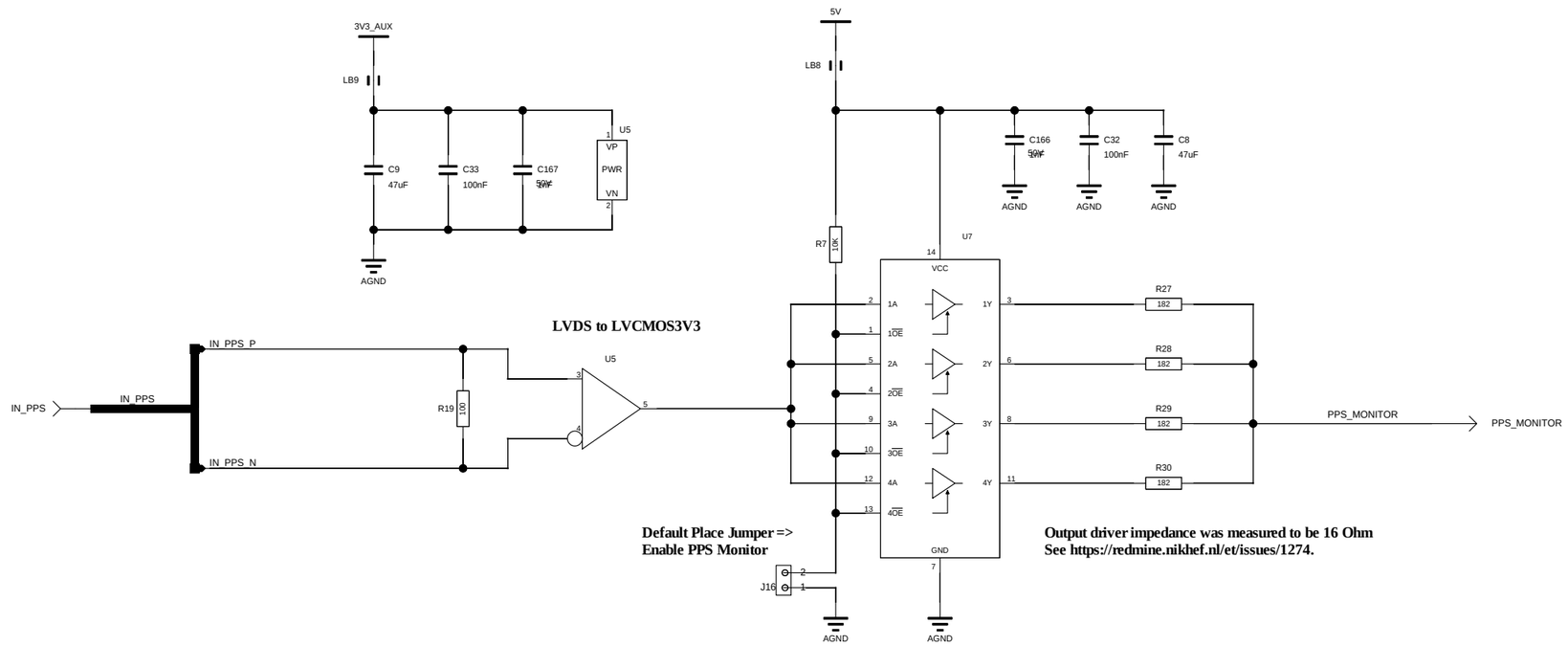

rev.	by	notes

Timing Main Board v2

Project : ET Pathfinder Demonstrator

Sheetname : PPS_BUFFER

Nikhef Amsterdam

Science Park 105, 1098XG, Amsterdam
+31-(0)20-5922000 www.nikhef.nl

11500.07.02.2

Designed by G C Visser

Drawn by G C Visser

Size 420 x 297mm

Sheet 8 of 23 A3

Date 2023-10-18

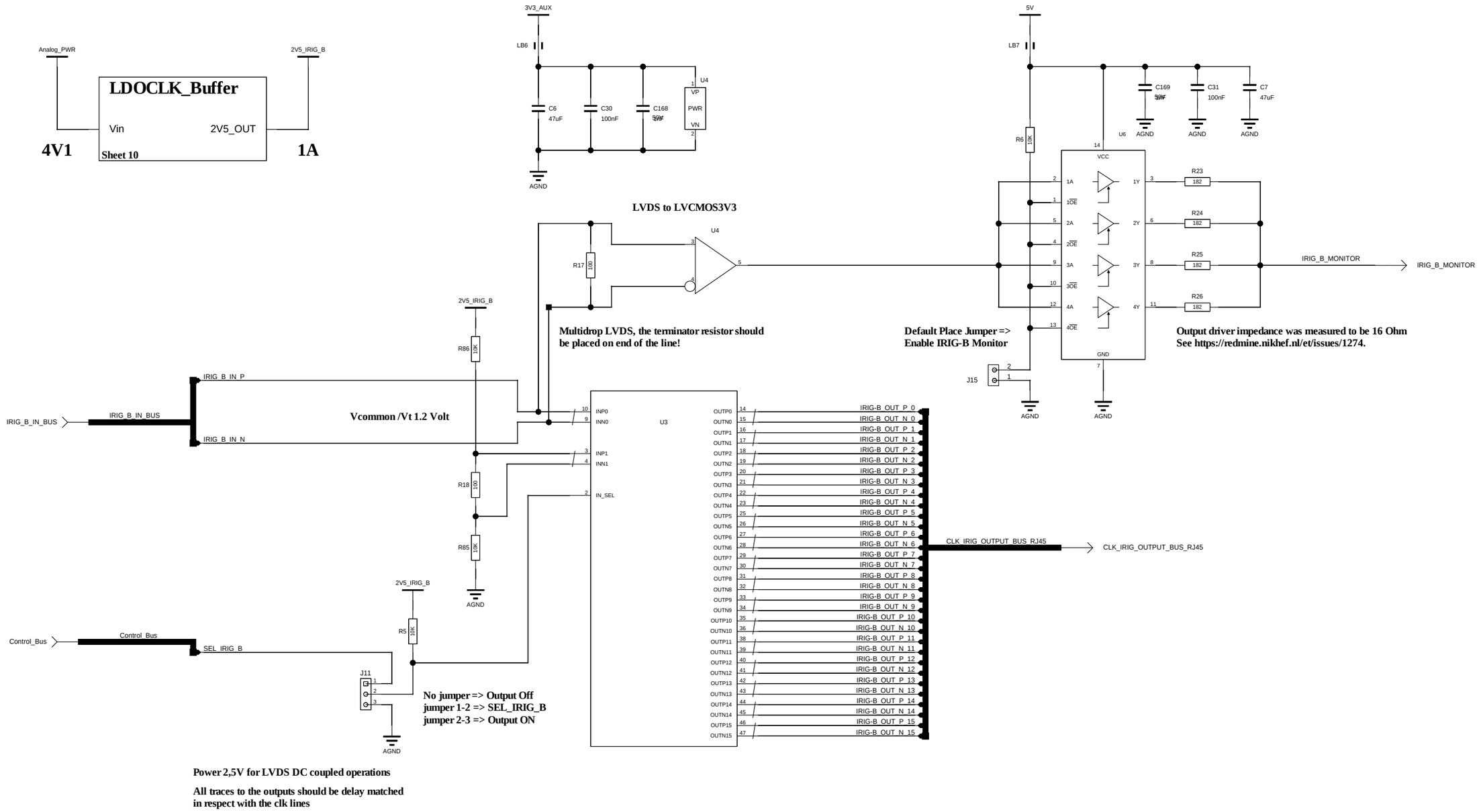

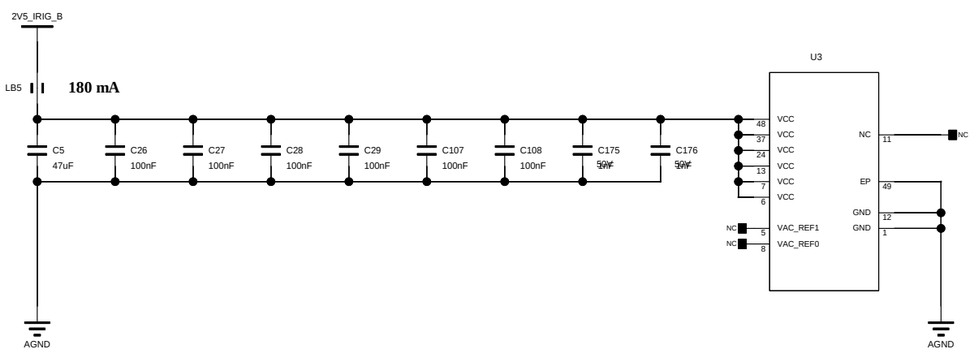

rev.	by	notes

Timing Main Board v2

Project : ET Pathfinder Demonstrator

Sheetname : OutputBuffer_IRIG_B

Nikhef Amsterdam

Science Park 105, 1098XG, Amsterdam
+31-(0)20-5922000 www.nikhef.nl

11500.07.02.2

Designed by G C Visser

Drawn by G C Visser

Size 420 x 297mm

Sheet 9 of 23 A3

Date 2023-10-18

2V5 Powersupply Needs large Copper plane for cooling

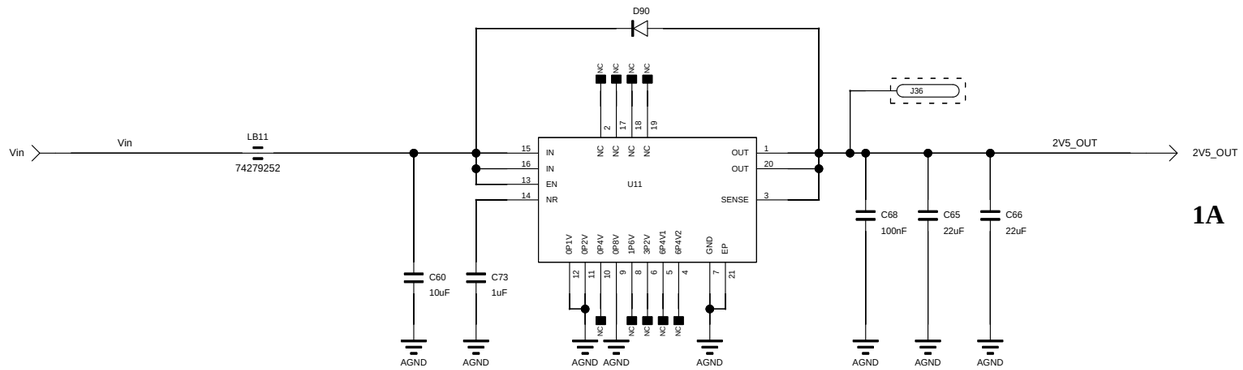

1A

rev.	by	notes

Timing Main Board v2

Project : ET Pathfinder Demonstrator

Sheetname : LDOCLKBuffer

Nikhef Amsterdam

Science Park 105, 1098XG, Amsterdam
+31-(0)20-5922000 www.nikhef.nl

11500.07.02.2

Designed by G C Visser

Drawn by G C Visser

Size 420 x 297mm

Sheet 10 of 23 A3

Date 2023-10-18

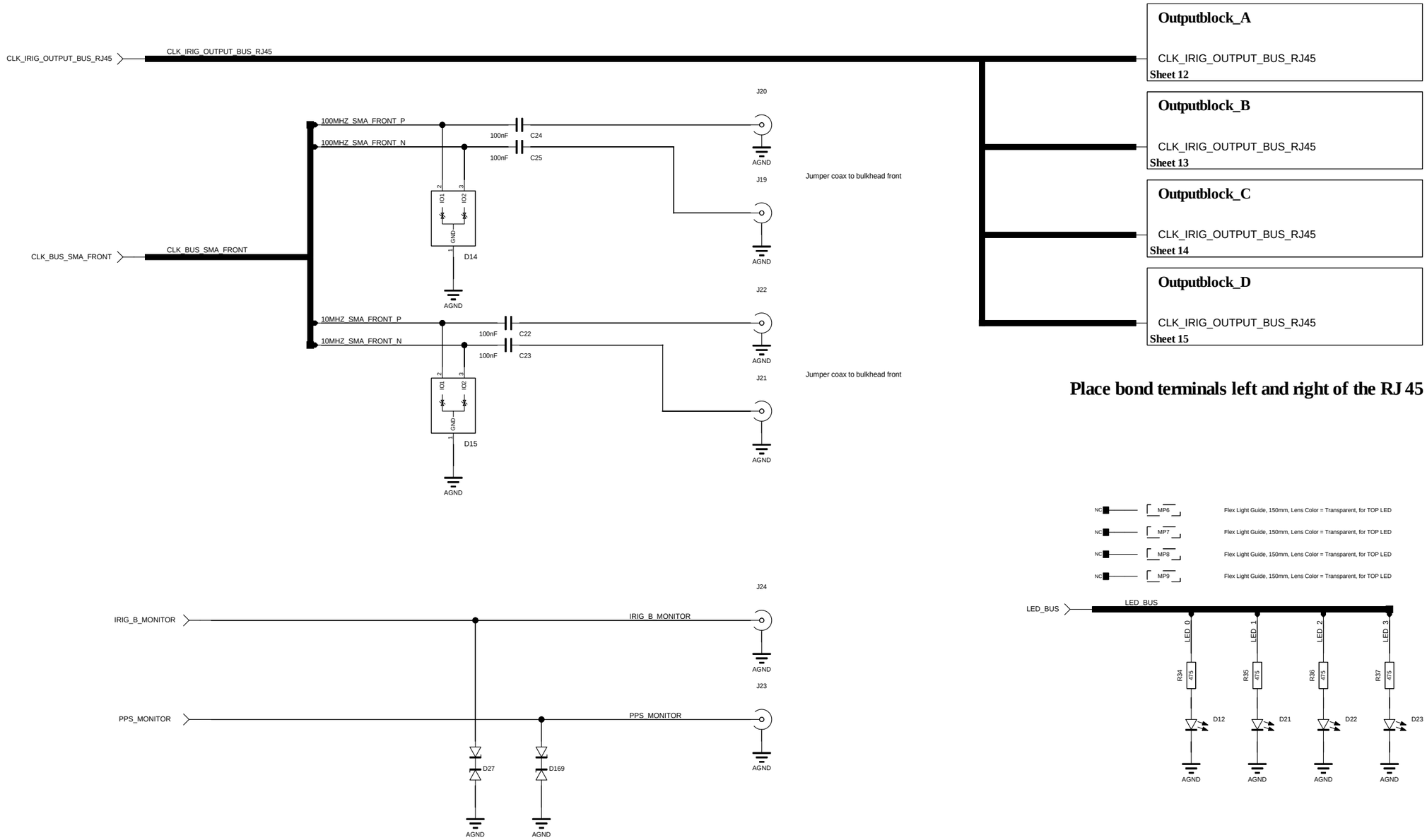

rev.	by	notes

Timing Main Board v2

Project : ET Pathfinder Demonstrator

Sheetname : FrontIO

Nikhef Amsterdam

Science Park 105, 1098XG, Amsterdam
+31-(0)20-5922000 www.nikhef.nl

11500.07.02.2

Designed by G C Visser

Drawn by G C Visser

Size 420 x 297mm

Sheet 11 of 23 A3

Date 2023-10-18

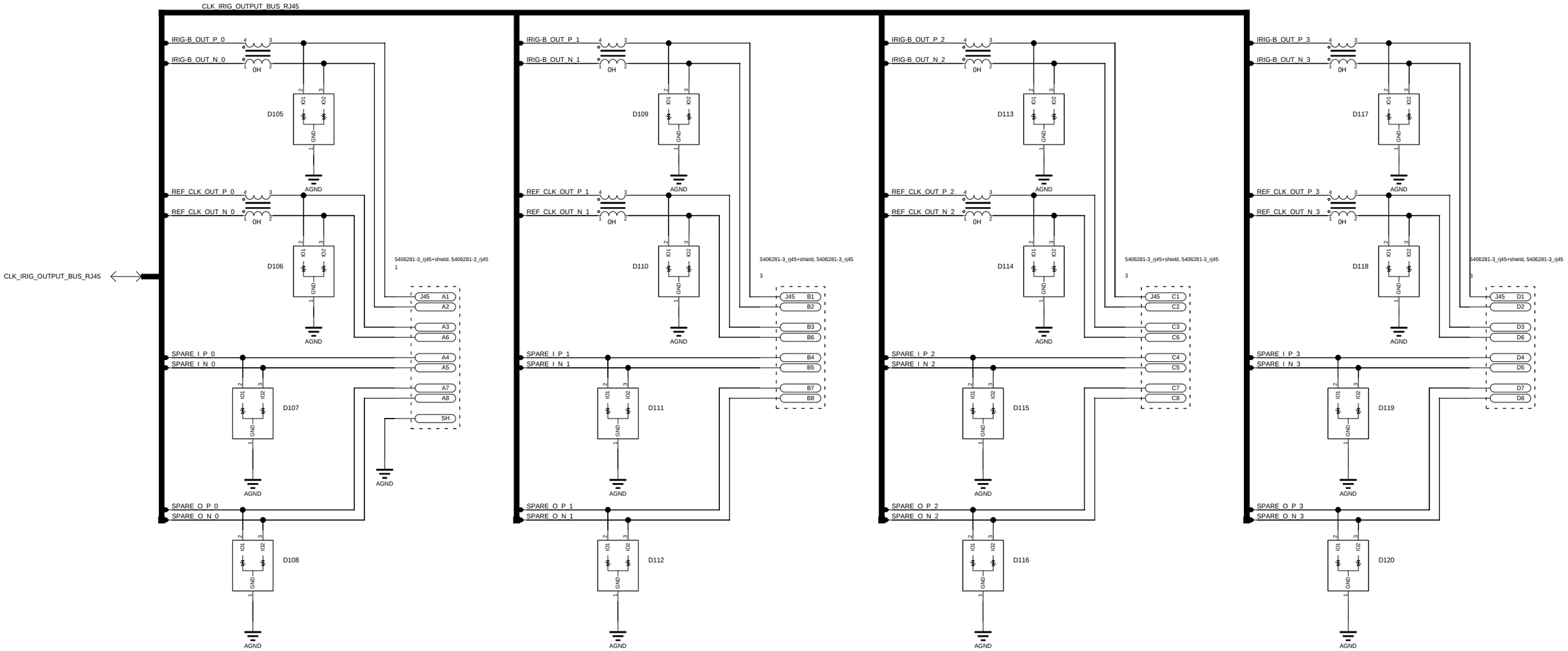

rev.	by	notes

Timing Main Board v2

Project : ET Pathfinder Demonstrator

Sheetname : OutputBlock_A

Nikhef Amsterdam

Science Park 105, 1098XG, Amsterdam
+31-(0)20-5922000 www.nikhef.nl

11500.07.02.2

Designed by G C Visser

Drawn by G C Visser

Size 420 x 297mm

Sheet 12 of 23 A3

Date 2023-10-18

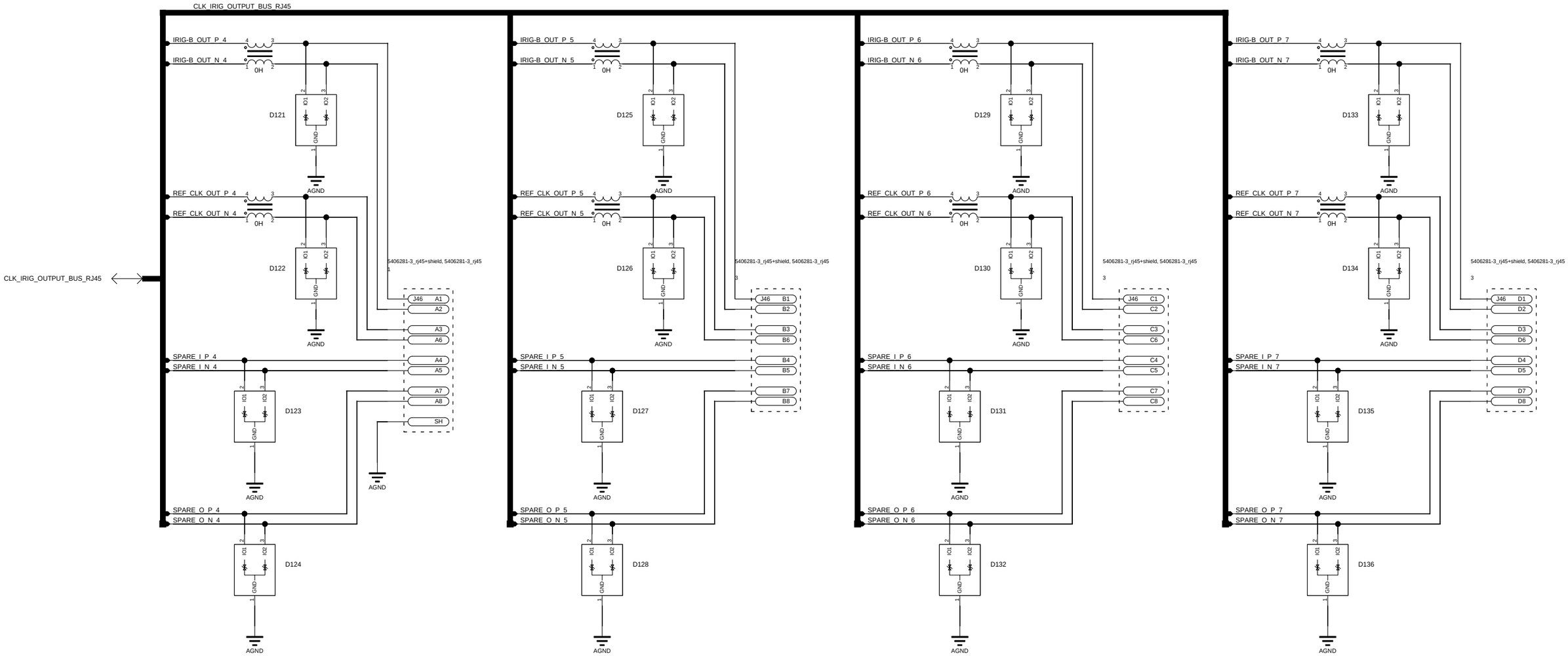

rev.	by	notes

Timing Main Board v2

Project : ET Pathfinder Demonstrator

Sheetname : OutputBlock_B

Nikhef Amsterdam

Science Park 105, 1098XG, Amsterdam
+31-(0)20-5922000 www.nikhef.nl

11500.07.02.2

Designed by G C Visser

Drawn by G C Visser

Size 420 x 297mm

Sheet 13 of 23 A3

Date 2023-10-18

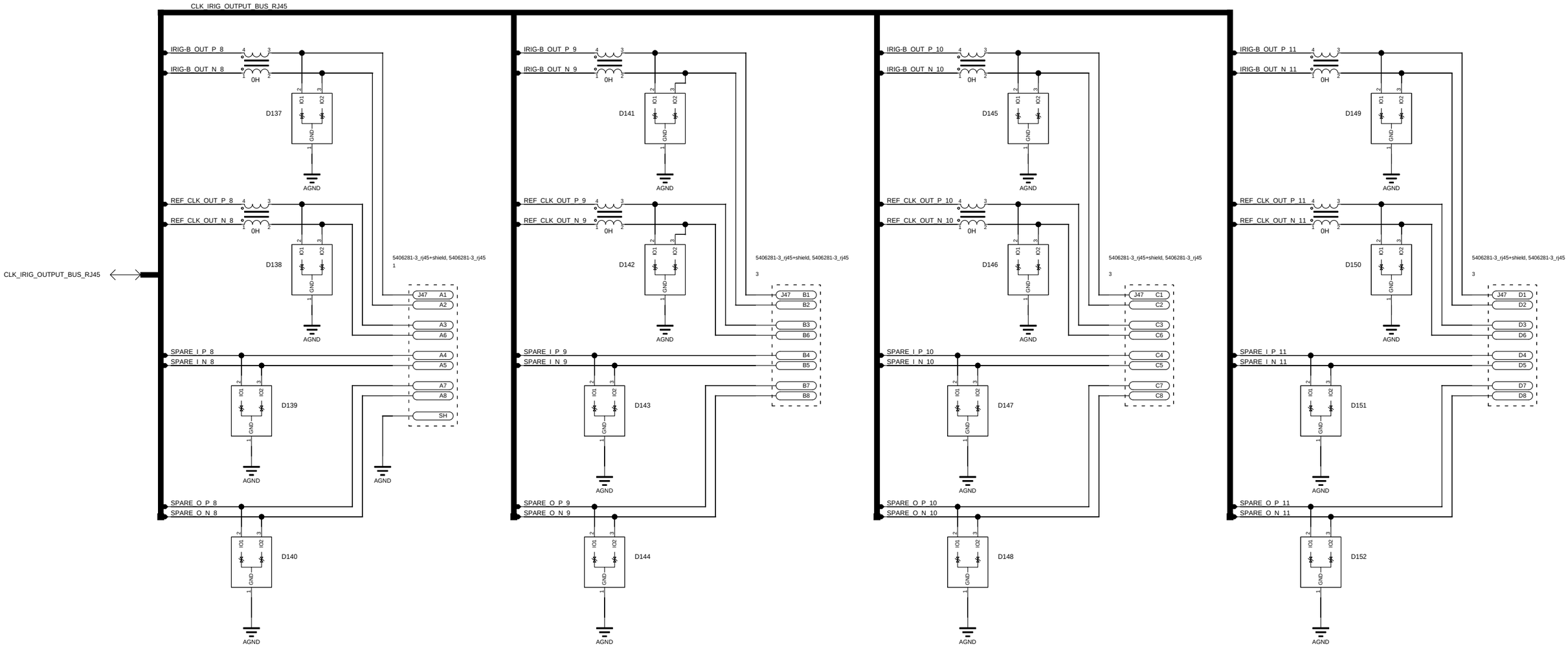

rev.	by	notes

Timing Main Board v2

Project : ET Pathfinder Demonstrator

Sheetname : OutputBlock_C

Nikhef Amsterdam

Science Park 105, 1098XG, Amsterdam
+31-(0)20-5922000 www.nikhef.nl

11500.07.02.2

Designed by G C Visser

Drawn by G C Visser

Size 420 x 297mm

Sheet 14 of 23 A3

Date 2023-10-18

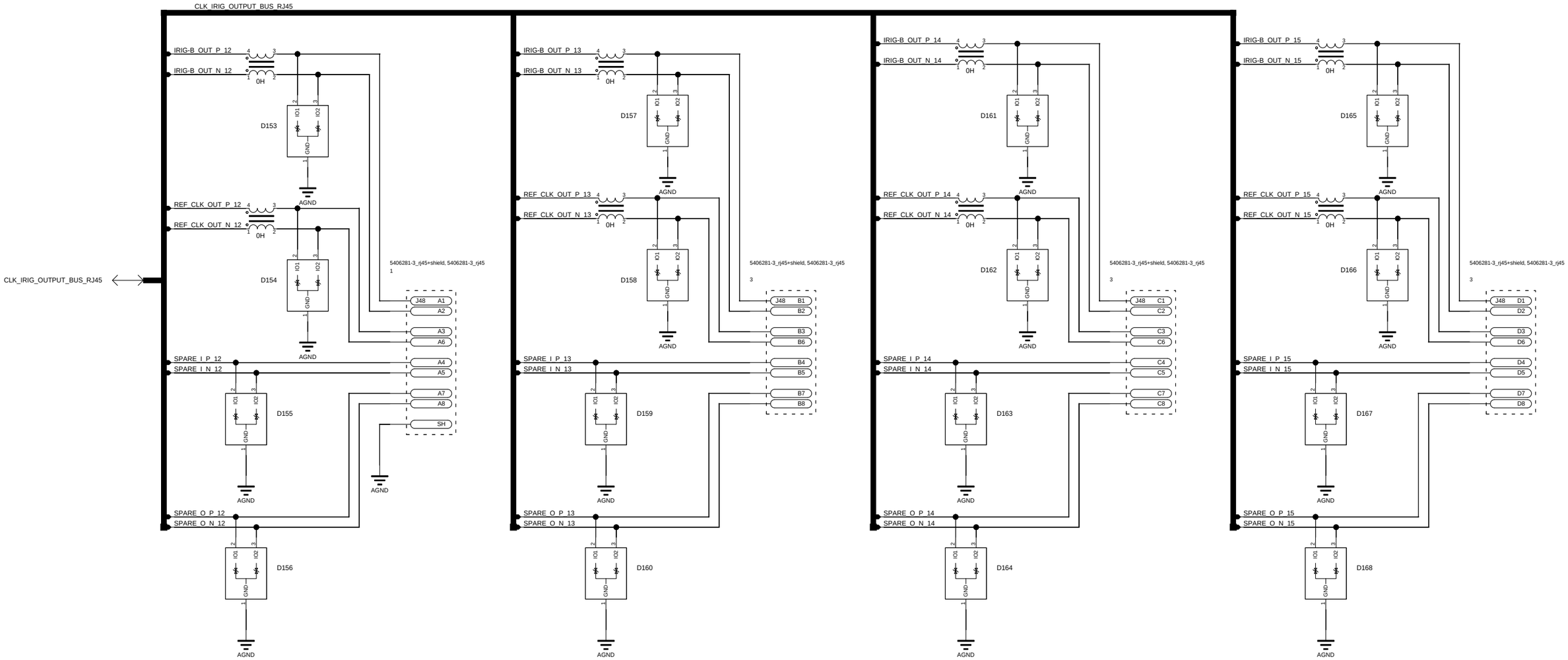

rev.	by	notes

Timing Main Board v2

Project : ET Pathfinder Demonstrator

Sheetname : OutputBlock_D

Nikhef Amsterdam

Science Park 105, 1098XG, Amsterdam
+31-(0)20-5922000 www.nikhef.nl

11500.07.02.2

Designed by G C Visser

Drawn by G C Visser

Size 420 x 297mm

Sheet 15 of 23 A3

Date 2023-10-18

Text on Board =>
LVDS !

From WR. Tune Reference oscillator.

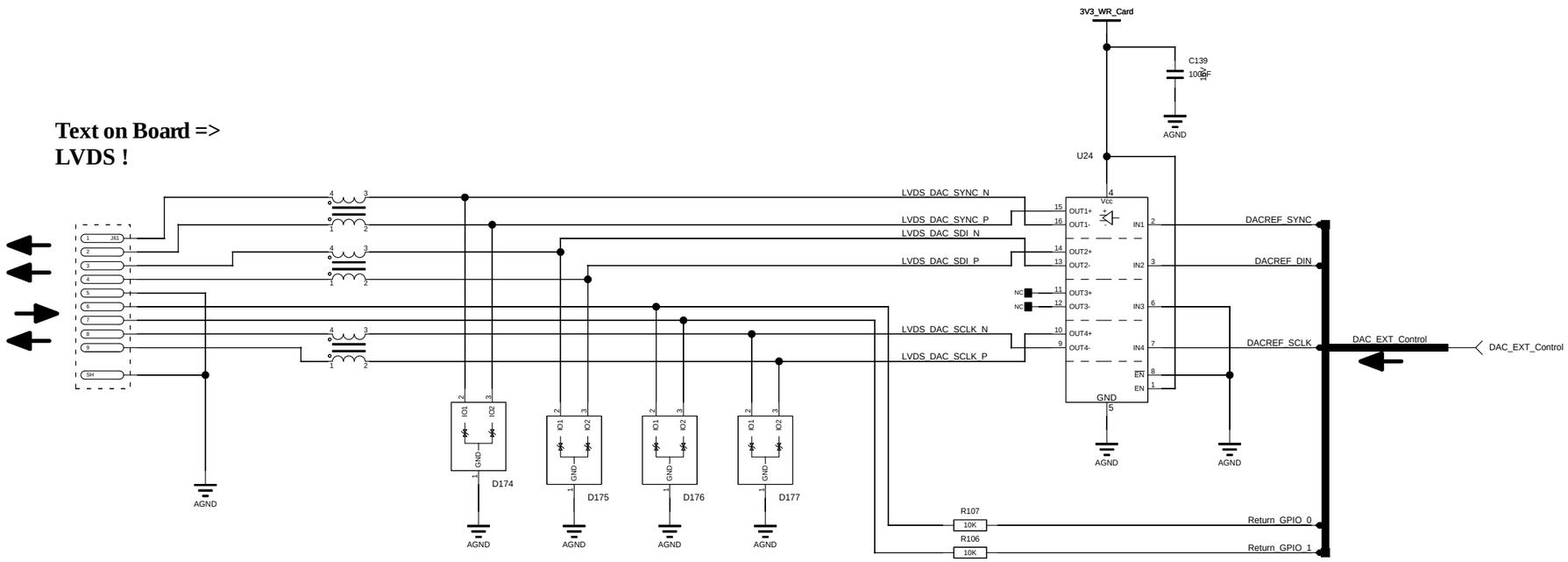

Can be used for various purpose
LVCMOS 2V5

rev.	by	notes

Timing Main Board v2

Project : ET Pathfinder Demonstrator

Sheetname : To_External_DAC

Nikhef Amsterdam

Science Park 105, 1098XG, Amsterdam
+31-(0)20-5922000 www.nikhef.nl

11500.07.02.2

Designed by G C Visser

Drawn by G C Visser

Size 420 x 297mm

Sheet 16 of 23 A3

Date 2023-10-18

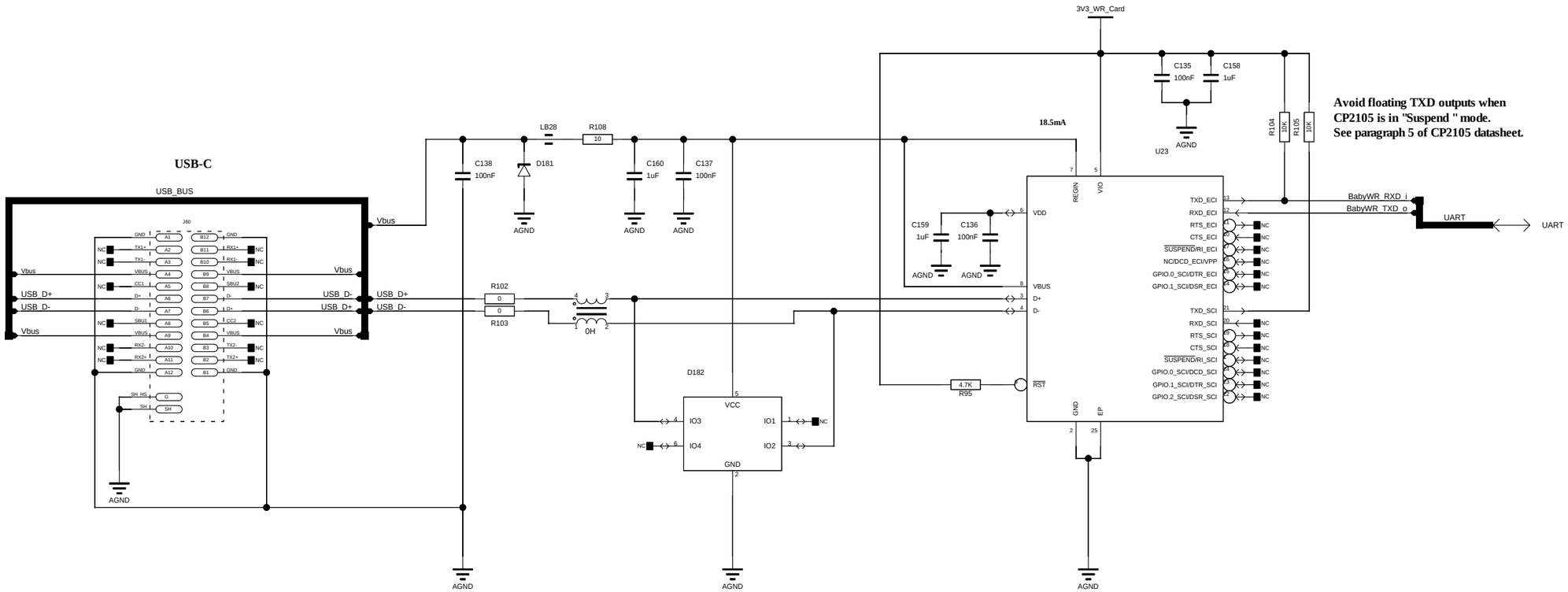

Avoid floating TXD outputs when CP2105 is in "Suspend " mode. See paragraph 5 of CP2105 datasheet.

Differtial impedance must 90 Ohm,See Universal Serial Bus Specification Revision 2.0 chapter 7.1

rev.	by	notes

Timing Main Board v2

Project : ET Pathfinder Demonstrator

Sheetname : USB_UART

Nikhef Amsterdam

Science Park 105, 1098XG, Amsterdam
+31-(0)20-5922000 www.nikhef.nl

11500.07.02.2

Designed by G C Visser

Drawn by G C Visser

Size 420 x 297mm

Sheet 17 of 23 A3

Date 2023-10-18

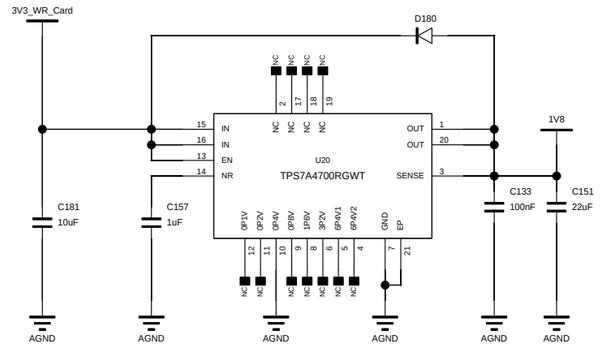

1V8 for SFP I2C level translator and few Pull-ups.

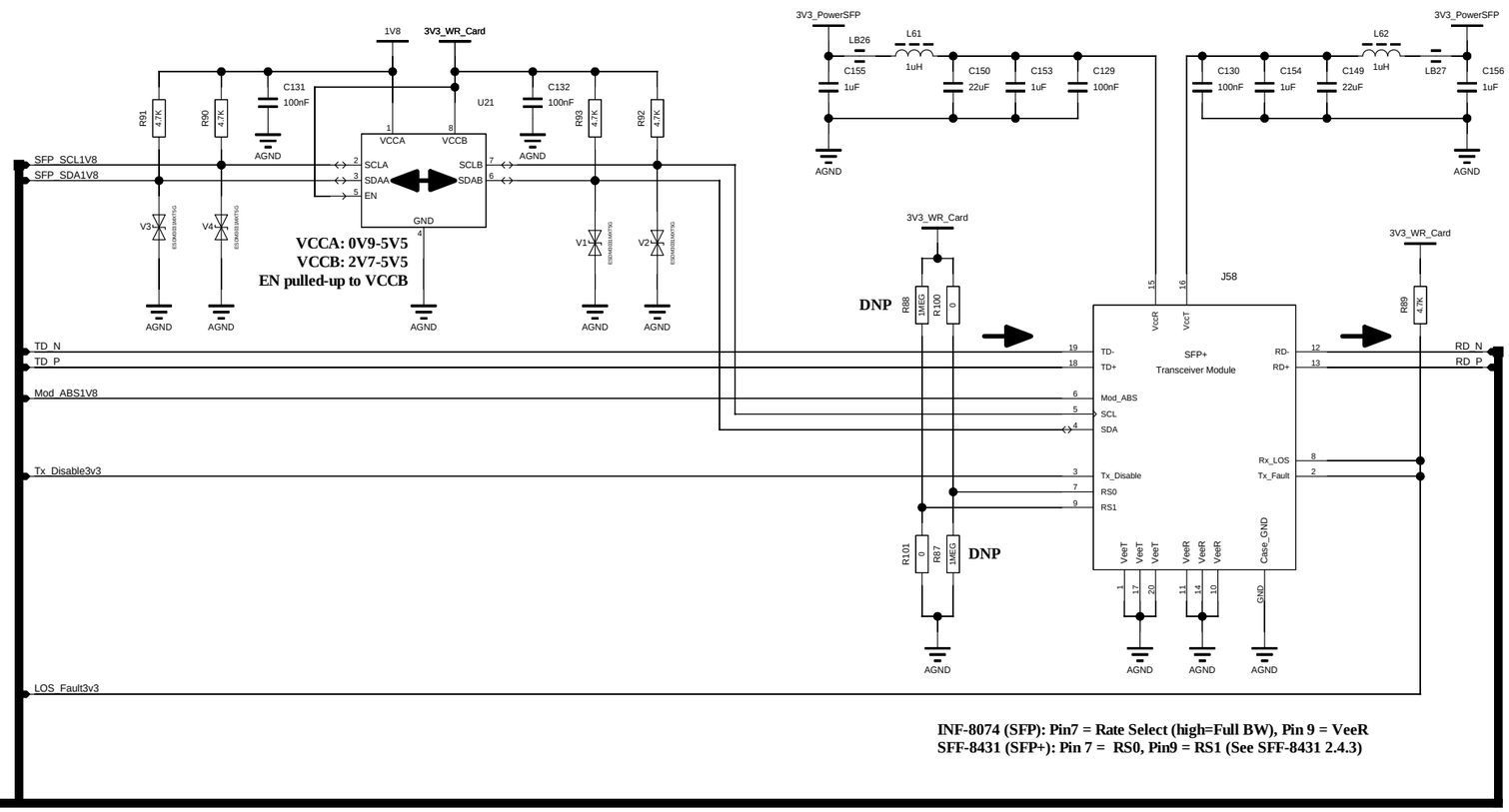

High speed signal Impedance 100 Ohm Diff

rev.	by	notes

Timing Main Board v2

Project : ET Pathfinder Demonstrator

Sheetname : SFPCage

Nikhef Amsterdam

Science Park 105, 1098XG, Amsterdam
+31-(0)20-5922000 www.nikhef.nl

11500.07.02.2

Designed by G C Visser

Drawn by G C Visser

Size 420 x 297mm

Sheet 18 of 23 A3

Date 2023-10-18

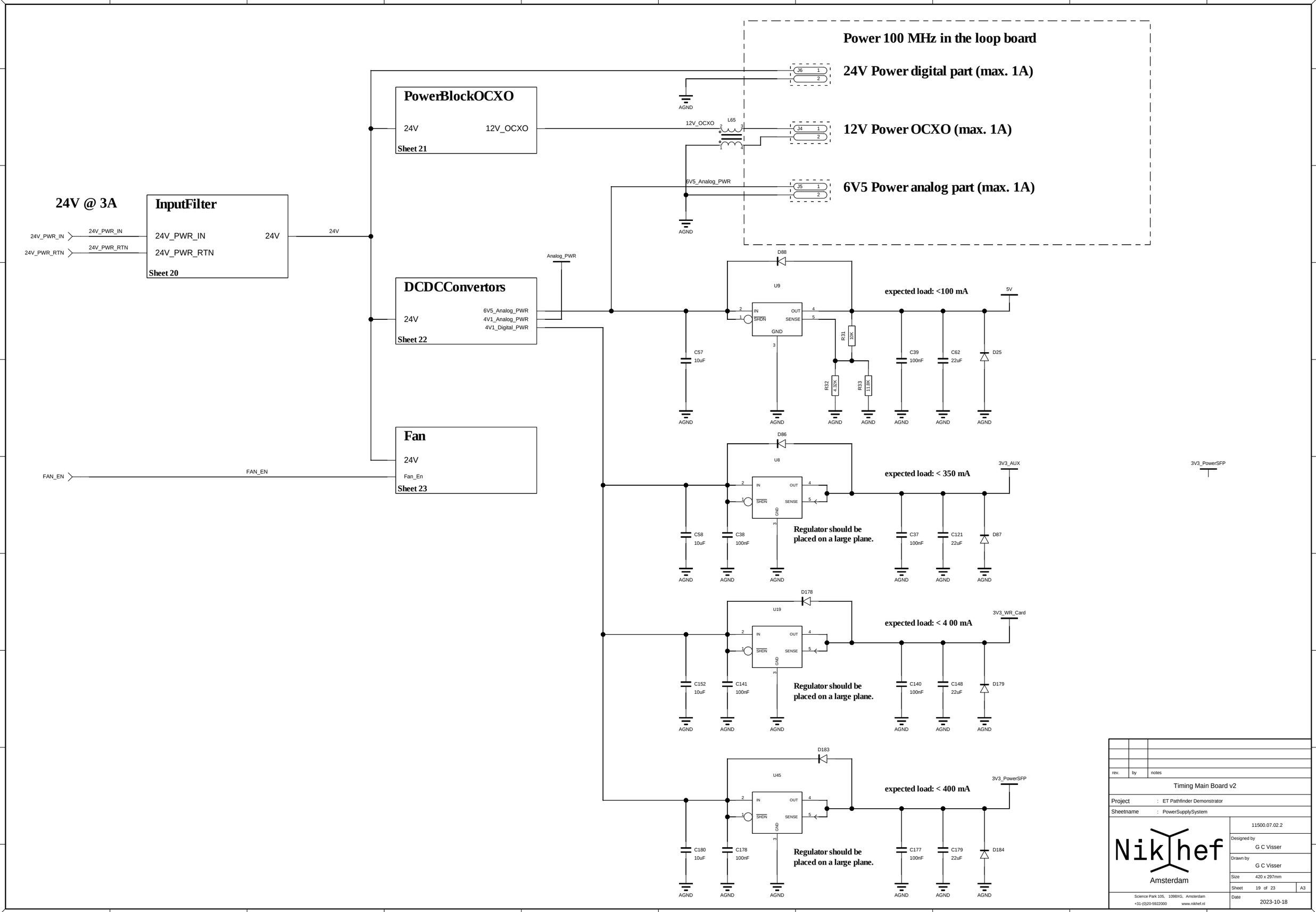

rev.	by	notes

Timing Main Board v2

Project : ET Pathfinder Demonstrator

Sheetname : PowerSupplySystem

Nikhef Amsterdam

Science Park 105, 1098XG, Amsterdam
+31-(0)20-5922000 www.nikhef.nl

11500.07.02.2

Designed by G C Visser

Drawn by G C Visser

Size 420 x 297mm

Sheet 19 of 23 A3

Date 2023-10-18

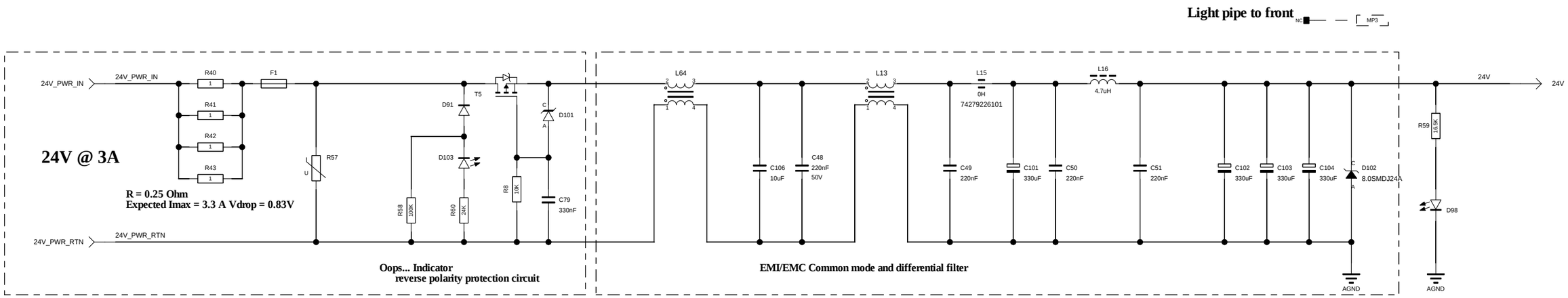

rev.	by	notes

Timing Main Board v2

Project : ET Pathfinder Demonstrator

Sheetname : InputFilter

Nikhef Amsterdam

Science Park 105, 1098XG, Amsterdam
+31-(0)20-5922000 www.nikhef.nl

11500.07.02.2

Designed by G C Visser

Drawn by G C Visser

Size 420 x 297mm

Sheet 20 of 23 A3

Date 2023-10-18

Dedicated power Supply for the OCXO
The powersupply is clean engough for the OCXO, after the SMPS
Is a lowpass filter installed to remove bulk of the ripple, and the output is cleaned up with the aid of a linear regulator.

Text on board : Warning 12V DC, only for ripple measurements

Vout Approx. 13.5V

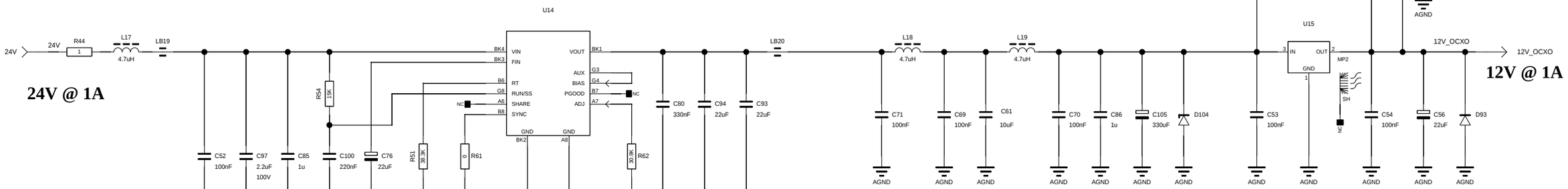

24V @ 1A

12V @ 1A

Add TO220 isolation

rev.	by	notes

Timing Main Board v2

Project : ET Pathfinder Demonstrator

Sheetname : PowerBlockOCXO

Nikhef Amsterdam

Science Park 105, 1098XG, Amsterdam
+31-(0)20-5922000 www.nikhef.nl

11500.07.02.2

Designed by G C Visser

Drawn by G C Visser

Size 420 x 297mm

Sheet 21 of 23 A3

Date 2023-10-18

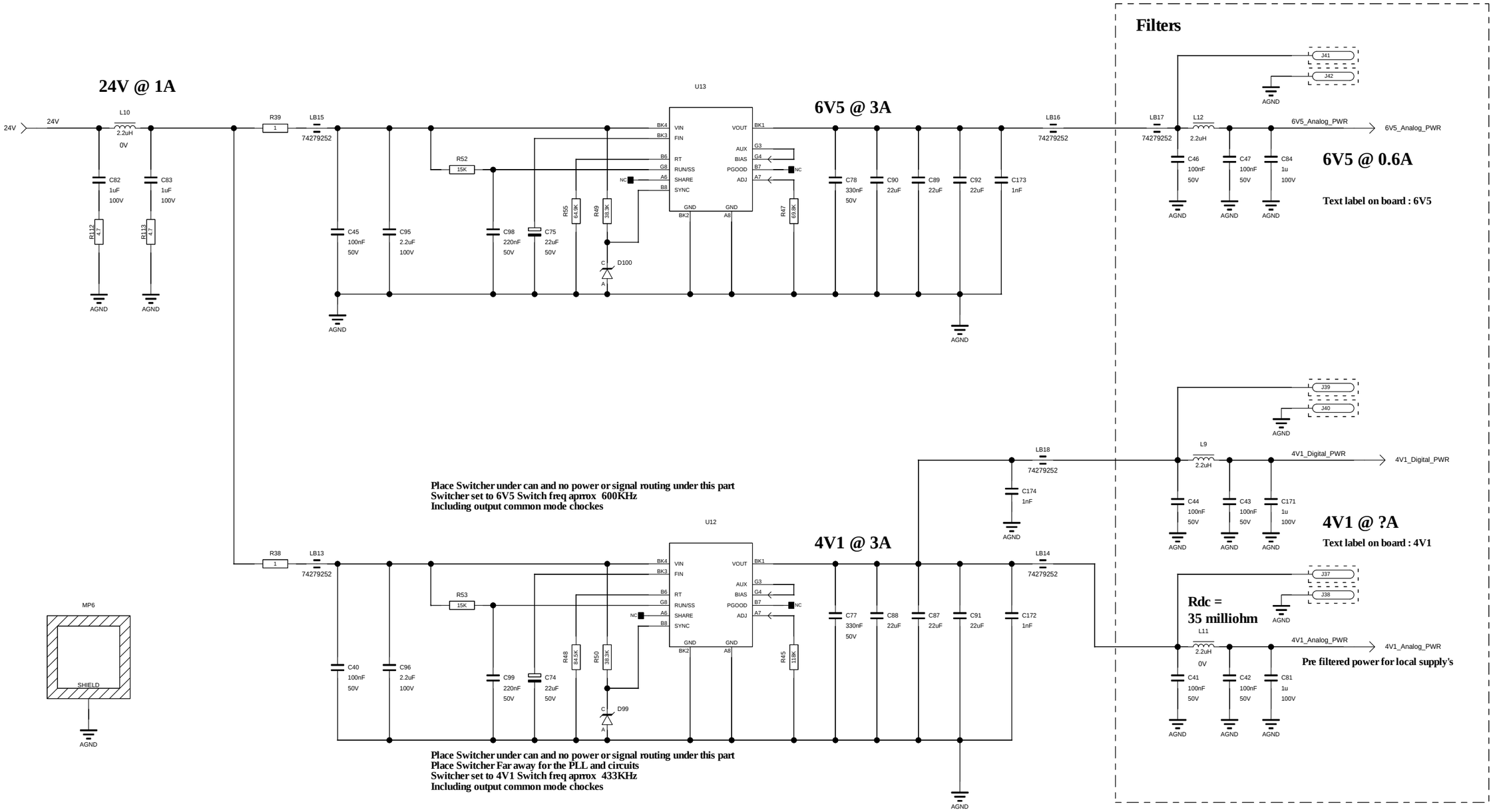

rev.	by	notes

Timing Main Board v2

Project : ET Pathfinder Demonstrator

Sheetname : DCDConvertors

Nikhef Amsterdam

Science Park 105, 1098XG, Amsterdam
+31-(0)20-5922000 www.nikhef.nl

11500.07.02.2

Designed by G C Visser

Drawn by G C Visser

Size 420 x 297mm

Sheet 22 of 23 A3

Date 2023-10-18

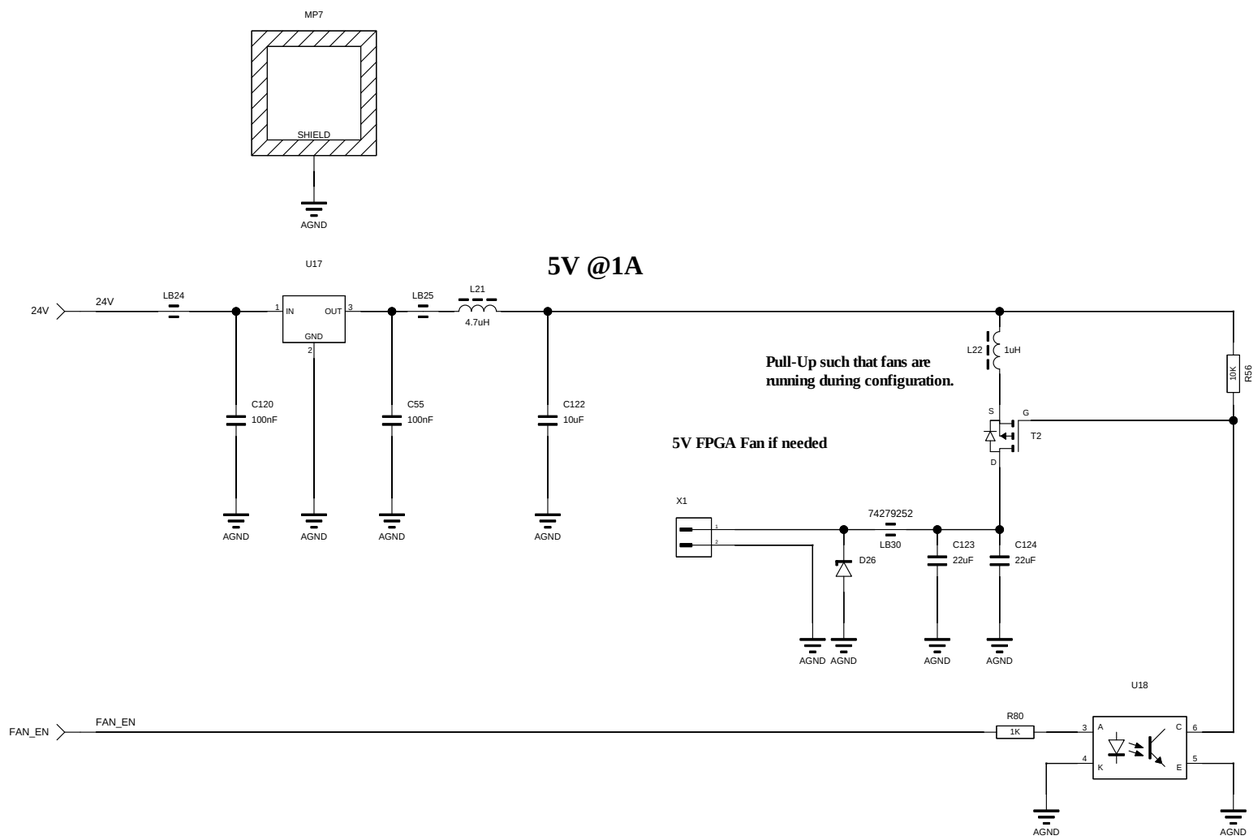

rev.	by	notes

Timing Main Board v2

Project : ET Pathfinder Demonstrator

Sheetname : Fan

Nikhef Amsterdam

Science Park 105, 1098XG, Amsterdam
+31-(0)20-5922000 www.nikhef.nl

11500.07.02.2

Designed by G C Visser

Drawn by G C Visser

Size 420 x 297mm

Sheet 23 of 23 A3

Date 2023-10-18